SHEETS CONTENT:

PAGE #1 INDEX & COVER PAGE
PAGE #1A ASSEMBLY ELEVATIONS, (DETAILS #20,21,22)
PAGE #2 TYPICAL SECTION THROUGH, VERTICAL/HORIZONTAL.
PAGE #3 FRAME SECTIONS AND REINFORCINGS, (DETAILS #15,16,17,18,19)
PAGE #4 DOOR SECTION THROUGH EDGE SEAM, (DETAIL #6)
PAGE #5 DOOR TOP AND BOTTOM TYPICAL END CHANNEL, (DETAIL #12)
PAGE #6 DOOR SURFACE CLOSER REINFORCING, (DETAIL #11)
PAGE #7 DOOR SURFACE CLOSER REINF AND END CHANNEL ASSEMBLY, (DETAIL #13)
PAGE #8 DOOR STEEL TOP CAP, (DETAIL #14)
PAGE #9 DOOR HINGE REINFORCING.
PAGE #10 ANSI #A115.1 #86 MORTISE LOCK,RP REINFORCINGS, (DETAIL #9)
PAGE #11 #161 LOCK, REINFORCINGS, (DETAIL #8)
PAGE #12 RIM PANIC SURFACE BOLT REINFORCINGS, (DETAIL #10)
PAGE #13 13A ANCHOR OPTIONS AND DETAILS
PAGE #14 BILL OF MATERIALS

MAX. A.S.D. DESIGN PRESSURE RATING
+90, −90 PSF

THIS DRAWING SHALL ONLY BE USED TO OBTAIN PERMITS IN THE STATE OF FLORIDA

GENERAL NOTES AND SPECIFICATIONS:

1. SINGLE SERIES LS18 FLUSH/EMBOSSED OUTSWING COMMERCIAL STEEL DOOR W/SERIES "AS" FRAME, SHOWN ON THIS PRODUCT EVALUATION DOCUMENT (P.E.D.) HAS BEEN VERIFIED FOR CODE COMPLIANCE IN ACCORDANCE WITH THE **2023 (8th EDITION)** OF THE FLORIDA BUILDING CODE. DOOR MAY BE INSTALLED AT HIGH VELOCITY HURRICANE ZONES.

DESIGN WIND LOADS SHALL BE DETERMINED AS PER SECTIONS **1620** OF THE ABOVE MENTIONED CODES, USING **ASCE 7–22** AND SHALL NOT EXCEED THE MAXIMUM (A.S.D.) DESIGN PRESSURE RATINGS INDICATED ON THIS SHEET.

IN ORDER TO VERIFY THE ABOVE CONDITION, ULTIMATE DESIGN WIND LOADS DETERMINED PER ASCE 7–22 SHALL BE FIRST REDUCED TO A.S.D. DESIGN WIND LOADS BY MULTIPLYING THEM BY 0.6 IN ORDER TO COMPARE THESE W/ MAX. (A.S.D.) DESIGN PRESSURE RATINGS INDICATED ON THIS SHEET.

THIS DOOR'S ADEQUACY FOR WIND AND IMPACT LOAD HAS BEEN VERIFIED IN ACCORDANCE WITH SECTION 1626 OF THE ABOVE MENTIONED CODE AS PER PROTOCOLS TAS–201, TAS–202, TAS–203 AS PER HTL LAB REPORT #0279–1017–01 AND AS PER SUBMITTED STRUCTURAL CALCULATIONS, PERFORMED AS PER SECTION 1616 OF THE FLORIDA BUILDING CODE.

2. ALL COMPONENTS SHALL BE AS SPECIFIED ON APPLICABLE DETAIL SHEETS AND AT BILL OF MATERIALS (SHEET 14) OF THIS DRAWING.

3. COMPLIANCE OF EGRESS / ESCAPE REQUIREMENTS OF THESE DOORS PER FBC TO BE DETERMINED BY BUILDING OFFICIALS ON A CASE–BY–CASE BASIS.

4. ALL SCREWS USED FOR ASSEMBLY CONNECTIONS (METAL TO METAL) TO BE STAINLESS STEEL 304 OR 316 AISI SERIES OR CORROSION RESISTANT COATED CARBON STEEL AS PER DIN 50018 WITH 50 ksi YIELD STRENGTH AND 90 ksi TENSILE STRENGTH & SHALL COMPLY W/ FLORIDA BUILDING CODE SECTION 2411.3.3.4.

5. ALL WELDING TO CONFORM W/AMERICAN WELDING SOCIETY A.W.S. D.1.3 AND D–19.0 REGULATIONS. USE E60XX ELECTRODES

6. ALL ANCHORS FOR DOOR FRAME CONNECTIONS TO EXISTING STRUCTURE SHALL BE AS SPECIFIED ON SHEET 13 OF THIS DRAWING.
MAXIMUM ANCHORS SPACINGS SHALL BE AS PER ELEVATIONS ON SHEET 1A OF THIS DRAWING.

7. PROVIDE 1/4" MAX. LOAD BEARING SHIM SPACE.

8. **THIS DOOR WILL NOT REQUIRE A HURRICANE PROTECTION DEVICE.**

9. THESE DOOR ASSEMBLIES ARE APPROVED FOR WATER AND AIR INFILTRATION AS PER TESTING INDICATED ON NOTE 1, AND SHALL BE LIMITED TO DESIGN PRESSURE RATINGS INDICATED ON THIS SHEET.

10. PROVIDE SPECIFIED SEALANT AT ALL DOOR FRAME AND THRESHOLD.

11. (a) THIS PRODUCT EVALUATION DOCUMENT (P.E.D.) PREPARED BY THIS ENGINEER IS GENERIC AND DOES NOT PROVIDE INFORMATION FOR A SITE SPECIFIC PROJECT; i.e. WHERE THE SITE CONDITIONS DEVIATE FROM THE P.E.D.

(b) CONTRACTOR TO BE RESPONSIBLE FOR THE SELECTION, PURCHASE AND INSTALLATION INCLUDING LIFE SAFETY OF THIS PRODUCT, BASED ON THIS P.E.D., PROVIDED HE/SHE DOES NOT DEVIATE FROM THE CONDITIONS DETAILED ON THIS DOCUMENT. CONSTRUCTION SAFETY AT SITE IS THE CONTRACTOR'S RESPONSIBILITY.

(c) THIS PRODUCT EVALUATION DOCUMENT (P.E.D.) WILL BE CONSIDERED INVALID IF ALTERED BY ANY MEANS.

(d) ORIGINAL P.E.D. SHALL BEAR THE DATE, SEAL AND SIGNATURE OF THE PROFESSIONAL ENGINEER OF RECORD THAT PREPARED IT.

12. PRODUCT'S MANUFACTURER'S LABEL SHALL BE LOCATED ON A READILY VISIBLE LOCATION AT DOOR. ONE LABEL SHALL BE PLACED FOR EVERY OPENING. LABELING TO COMPLY WITH SECTION 1709.5 OF THE FLORIDA BUILDING CODE.

WALTER A. TILLIT JR. LICENSE No. 44167 STATE OF FLORIDA PROFESSIONAL ENGINEER
8/17/2023

FLORIDA BUILDING CODE (HIGH VELOCITY HURRICANE ZONE)

©2023 TILTECO, INC.

TILTECO INC.
TILLIT TESTING & ENGINEERING COMPANY
6355N.W. 36th. St. Ste. 305, VIRGINIA GARDENS, FL 33166
Phone : (305)871–1530 . Fax : (305)871–1531
e–mail: tilteco@aol.com
CA–0006719
WALTER A. TILLIT Jr. P.E.
FLORIDA Lic. # 44167

SERIES LS18 FLUSH OUTSWING COMMERCIAL STEEL DOOR W/SERIES "AS" STEEL FRAME

DAYBAR INDUSTRIES LTD
50 WEST DRIVE, BRAMPTON, ON CANADA, L6T 2J4
TEL: 905 625–8000
FAX: 905 625–4204

REV. No	DESCRIPTION	DATE	REV. No	DESCRIPTION	DATE
1	OLD 20–152	08/17/23	3		
2			4		

DRAWN BY: Y.M.
08/17/2023 DATE
23–178 DRAWING No
SHEET 1 OF 14

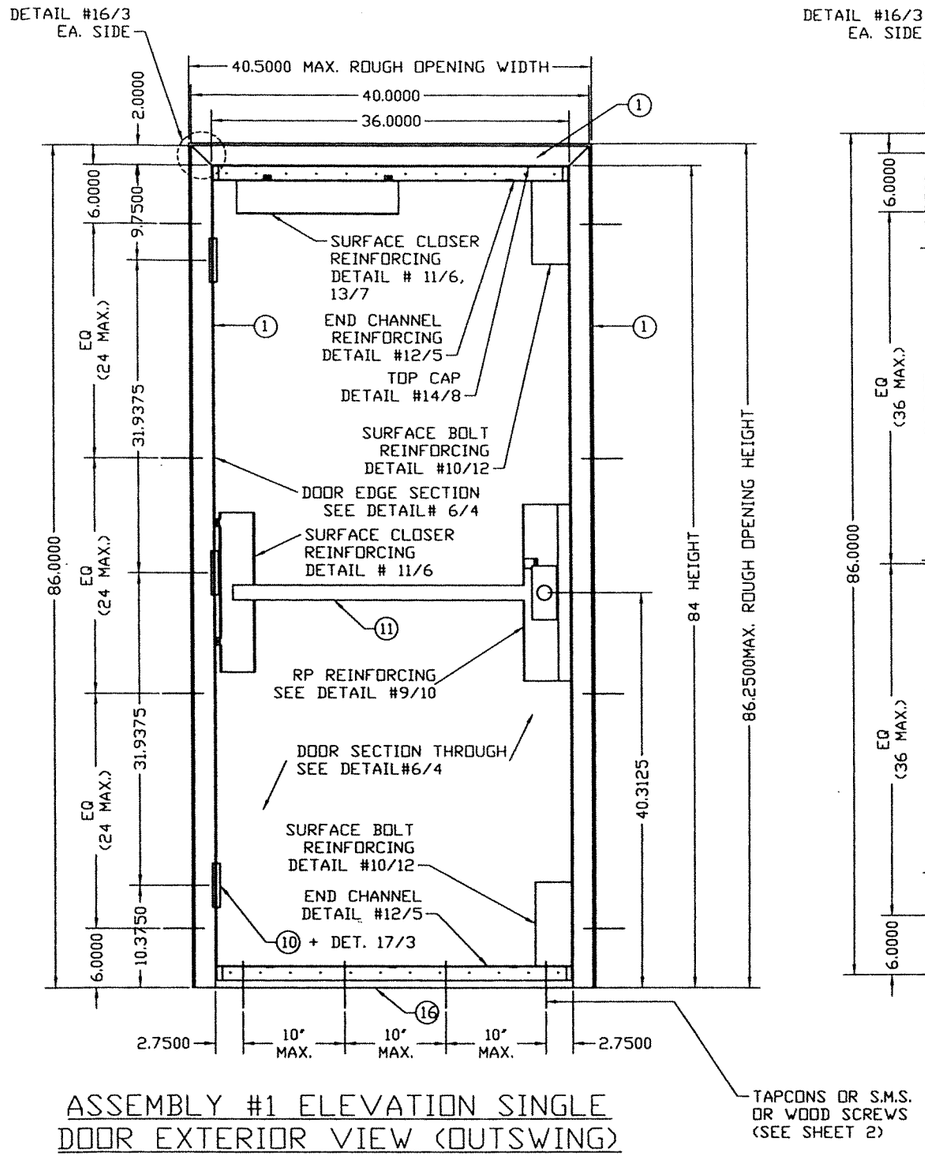

ASSEMBLY #1 ELEVATION SINGLE DOOR EXTERIOR VIEW (OUTSWING)
WALL CONDITION - EXISTING MASONRY OR WOOD STUD WALL
ANCHOR: E.M.A DETAIL #22
DETEX RIM EXIT DEVICE

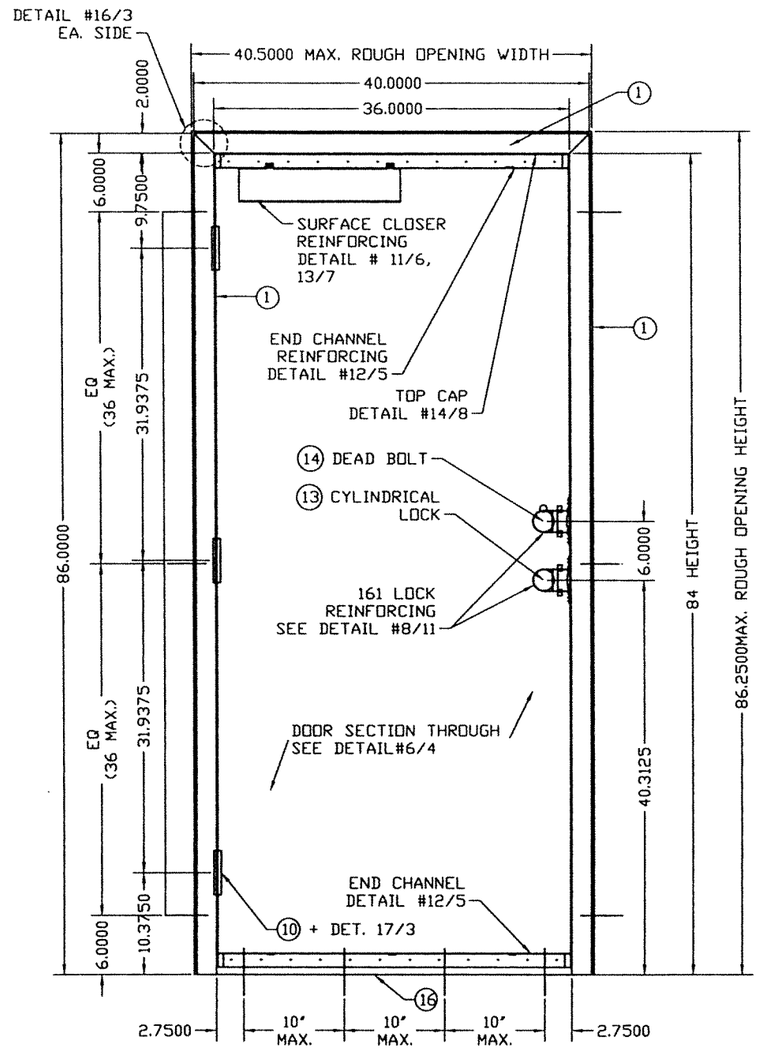

ASSEMBLY #2 ELEVATION SINGLE DOOR EXTERIOR VIEW (OUTSWING)
WALL CONDITION - WOOD STUD
ANCHOR: 2PC CLIP-IN DETAIL#20
CYLINDRICAL LOCK + DEAD BOLT

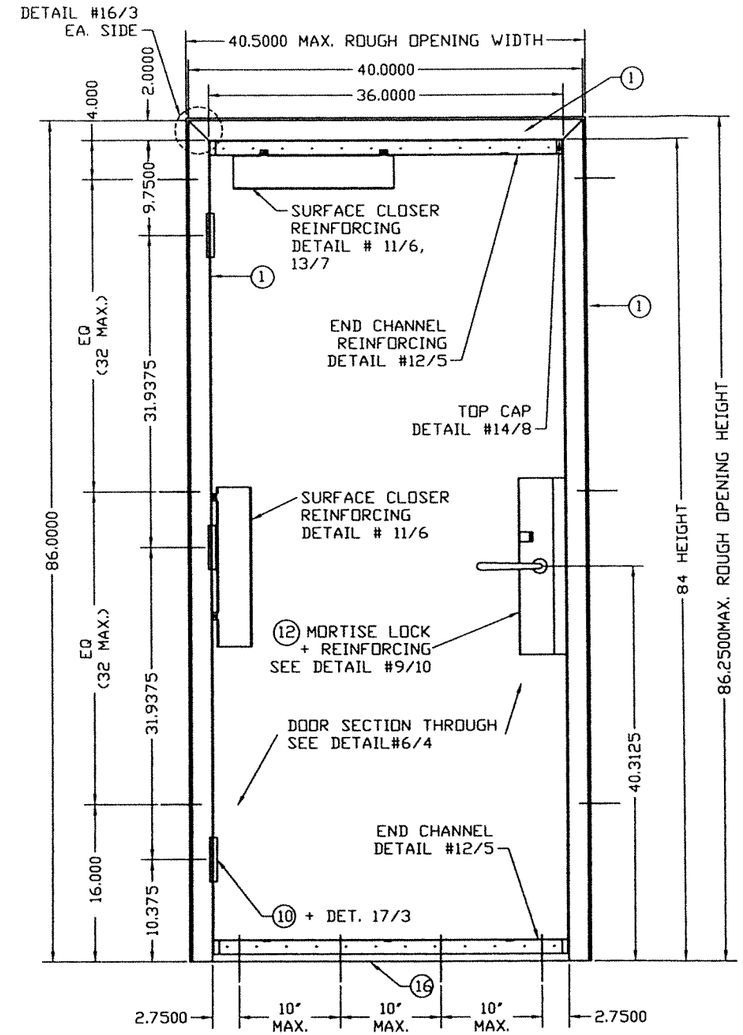

ASSEMBLY #3 ELEVATION SINGLE DOOR EXTERIOR VIEW (OUTSWING)
WALL CONDITION - MASONRY
ANCHOR: WIRE DETAIL #21
MORTISE LOCK.

FLORIDA BUILDING CODE (HIGH VELOCITY HURRICANE ZONE)

WALTER A. TILLIT JR. LICENSE No. 44167 STATE OF FLORIDA PROFESSIONAL ENGINEER 2023

©2023 TILTECO, INC.

TILTECO INC.
TILLIT TESTING & ENGINEERING COMPANY
6355N.W. 36th. St. Ste. 305, VIRGINIA GARDENS, Fl. 33166
Phone : (305)871-1530 . Fax : (305)871-1531
e-mail: tilteco@aol.com
CA-0006719
WALTER A. TILLIT Jr. P.E.
FLORIDA Lic. # 44167

SERIES LS18 FLUSH OUTSWING COMMERCIAL STEEL DOOR W/SERIES "AS" STEEL FRAME

DAYBAR INDUSTRIES LTD
50 WEST DRIVE, BRAMPTON, ON CANADA, L6T 2J4
TEL: 905 625-8000
FAX: 905 625-4204

REV. No	DESCRIPTION	DATE	REV. No	DESCRIPTION	DATE
1	OLD 20-152	08/17/23	3		
2			4		

DRAWN BY: Y.M.
08/17/2023 DATE
23-178 DRAWING No
SHEET 1A OF 14

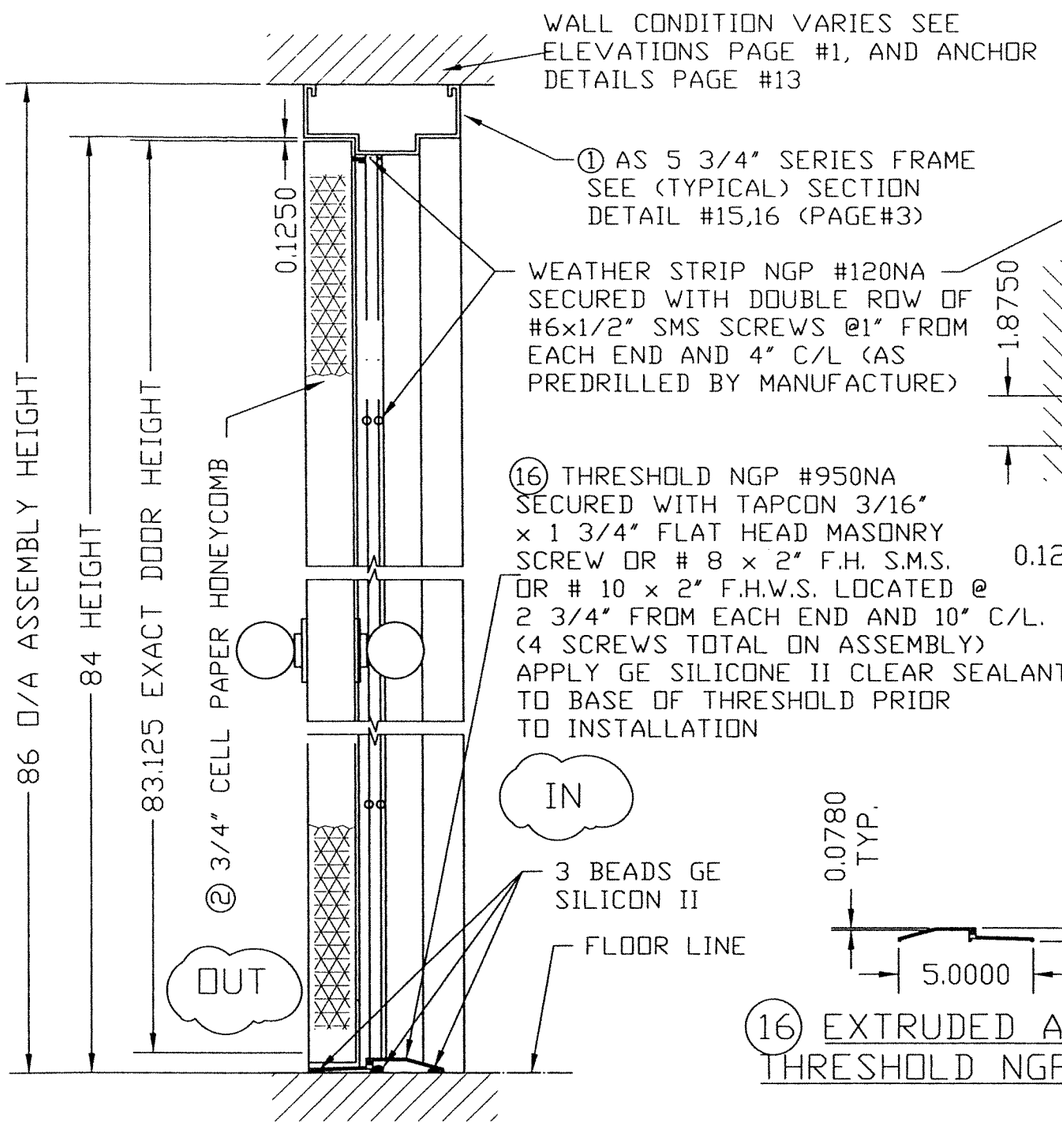

TYPICAL VERTICAL SECTION

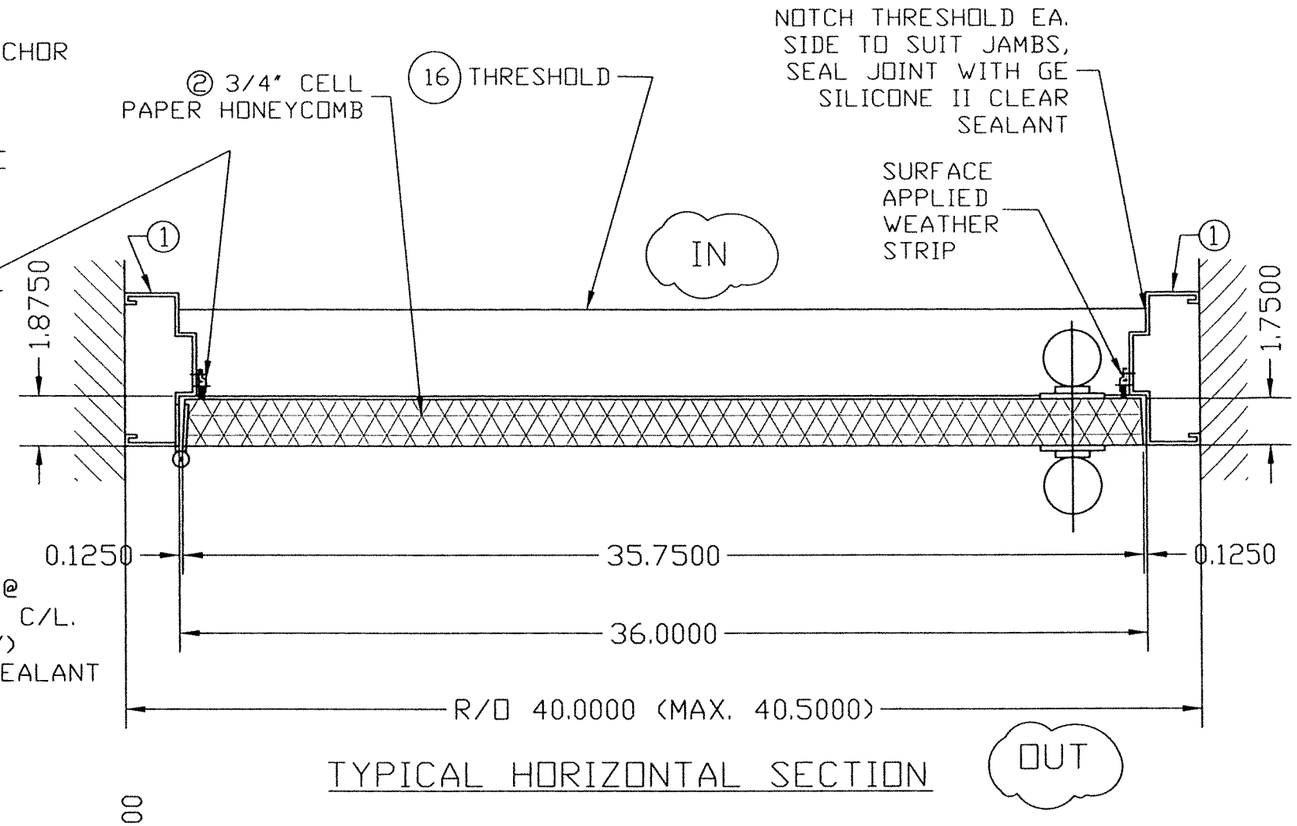

TYPICAL HORIZONTAL SECTION

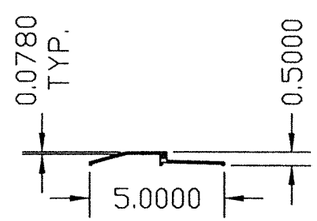

⑯ EXTRUDED ALUMINUM THRESHOLD NGP #950NA

DOOR MODEL: SERIES LS18 FLUSH OUTSWING COMMERCIAL STEEL W/ SERIES "AS" FRAME

MAX. SHIM SPACE IS 1/4" TYP.

WALTER A. TILLIT JR. LICENSE No. 44167 STATE OF FLORIDA PROFESSIONAL ENGINEER

8/17/23

MATERIAL NOTE:

② DOOR 18 GAUGE .045 MINIMUM.
ALL STEEL COMPONENTS OF THIS ITEM, i.e., FACE SHEETS, INTERNAL COMPONENTS AND REINFORCEMENTS ARE MANUFACTURED FROM TENSION LEVELED STEEL CONFORMING TO ASTM A924, GALVANIZED TO ASTM A653/A653M, COMMERCIAL STEEL (TYPE B), COATING DESIGNATION A40, KNOWN COMMERCIALLY AS PAINTABLE GALVANNEAL: AVERAGE TENSILE STRENGTH: 52 KSI ;AVERAGE YIELD STRENGTH: 45 KSI, ELONGATION: 40%.

① FRAME 16 GAUGE .058 MINIMUM
ALL STEEL COMPONENTS OF THIS ITEM, i.e., HEAD, JAMBS, REINFORCEMENTS AND ANCHORS ARE MANUFACTURED FROM COMMERCIAL STEEL (TYPE B), GALVANIZED TO ASTM A653/A653M, COATING DESIGNATION A40, KNOWN COMMERCIALLY AS PAINTABLE GALVANNEAL: AVERAGE TENSILE STRENGTH, 52 KSI
AVERAGE YIELD STRENGTH, 45 KSI, ELONGATION: 40%.

FLORIDA BUILDING CODE (HIGH VELOCITY HURRICANE ZONE)

©2023 TILTECO, INC.

TILTECO INC.
TILLIT TESTING & ENGINEERING COMPANY
6355N.W. 36th. St., Ste. 305, VIRGINIA GARDENS, Fl. 33166
Phone : (305)871-1530 . Fax : (305)871-1531
e-mail: tilteco@aol.com
CA-0006719
WALTER A. TILLIT Jr. P.E.
FLORIDA Lic. # 44167

SERIES LS18 FLUSH OUTSWING COMMERCIAL STEEL DOOR W/SERIES "AS" STEEL FRAME

DAYBAR INDUSTRIES LTD
50 WEST DRIVE, BRAMPTON, ON CANADA, L6T 2J4
TEL: 905 625-8000
FAX: 905 625-4204

REV. No	DESCRIPTION	DATE	REV. No	DESCRIPTION	DATE
1	OLD 20-152	08/17/23	3		
2			4		

DRAWN BY: Y.M.
08/17/2023 DATE
23-178 DRAWING No
SHEET 2 OF 14

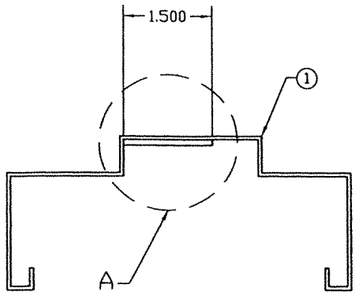

A
1:2

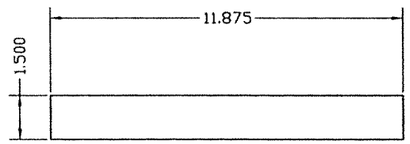

REINFORCING MATERIAL:
GAUGE 12 MINIMUM (0.097 THICK)
GALVANNEAL

SURFACE STRIKE REINFORCING DETAIL #19

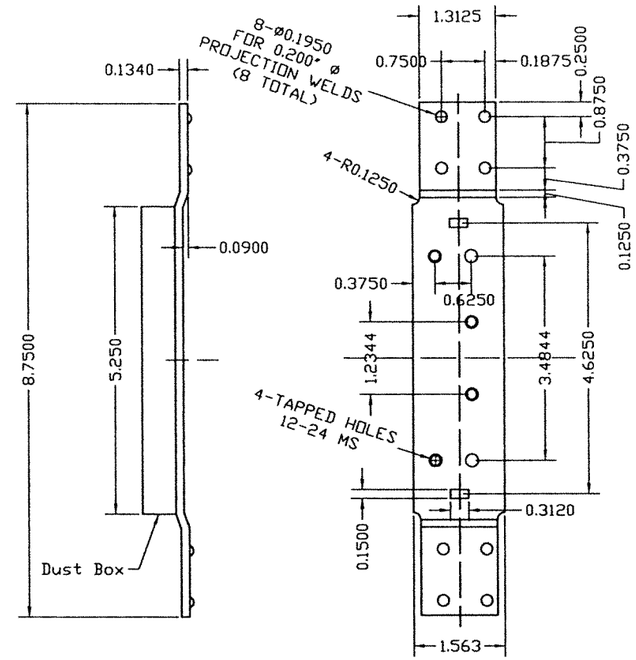

MATERIAL:
GAUGE 10 MINIMUM
GALVANNEAL

3, 4 4 1/2" FRAME HINGE REINFORCING DETAIL #17

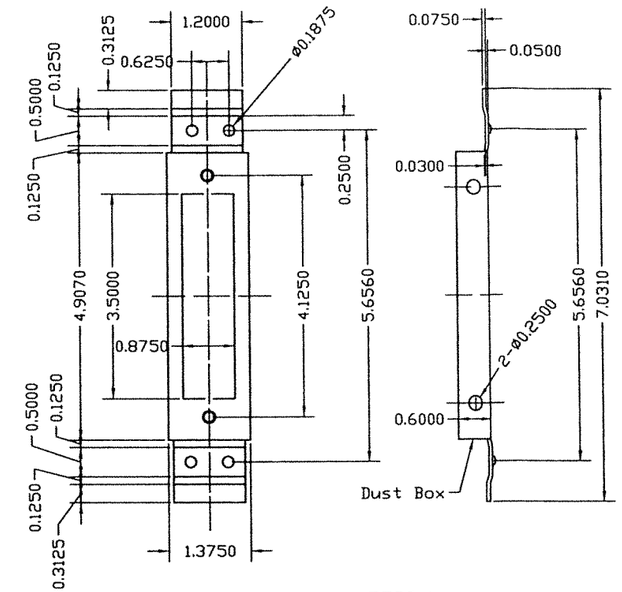

MATERIAL:
GAUGE 12 MINIMUM
GALVANNEAL

5 4 7/8" STRIKE REINFORCEMENT FOR FRAME DETAIL #18

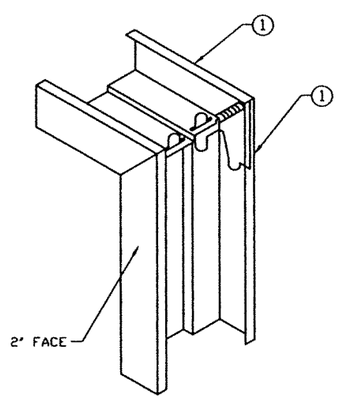

1. DIEMITERED CORNER CONT. WELDED INSIDE FACES & AT RETURNS
2. CAULK COMPLETE INSIDE CORNER WITH GE SILICONE II

TYPICAL WELDED CORNER DETAIL #16

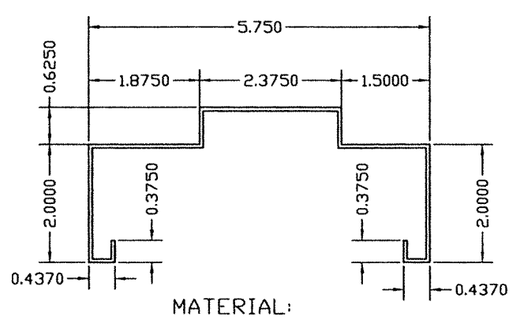

MATERIAL:
GAUGE 16 MINIMUM (.057)
GALVANNEAL

1 AS 5 3/4" TYPICAL SECTION THROUGH DETAIL #15

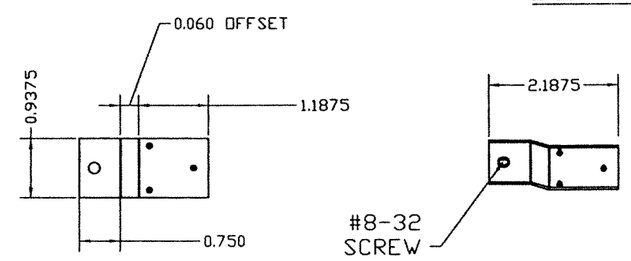

DEAD LOCK STRIKE TAB 14 GA (0.074) MIN

ATTACHED TO STRIKE JAMB W/
(3) 1/8"Ø PROJECTION WELDS.

WALTER A. TILLIT JR
LICENSE
No. 44167
STATE OF FLORIDA
PROFESSIONAL ENGINEER

8/17/2023

FLORIDA BUILDING CODE (HIGH VELOCITY HURRICANE ZONE)

©2023 TILTECO, INC.

TILTECO INC.
TILLIT TESTING & ENGINEERING COMPANY
6355N.W. 36th. St., Ste. 305, VIRGINIA GARDENS, FL 33166
Phone : (305)871-1530 . Fax : (305)871-1531
e-mail: tilteco@aol.com
CA-0006719
WALTER A. TILLIT Jr. P.E.
FLORIDA Lic. # 44167

SERIES LS18 FLUSH OUTSWING COMMERCIAL STEEL DOOR W/SERIES "AS" STEEL FRAME

DAYBAR INDUSTRIES LTD
50 WEST DRIVE, BRAMPTON,
ON CANADA, L6T 2J4
TEL: 905 625-8000
FAX: 905 625-4204

REV. No	DESCRIPTION	DATE	REV. No	DESCRIPTION	DATE
1	OLD 20-152	08/17/23	3		
2			4		

DRAWN BY: Y.M.
08/17/2023
DATE
23-178
DRAWING No
SHEET 3 OF 14

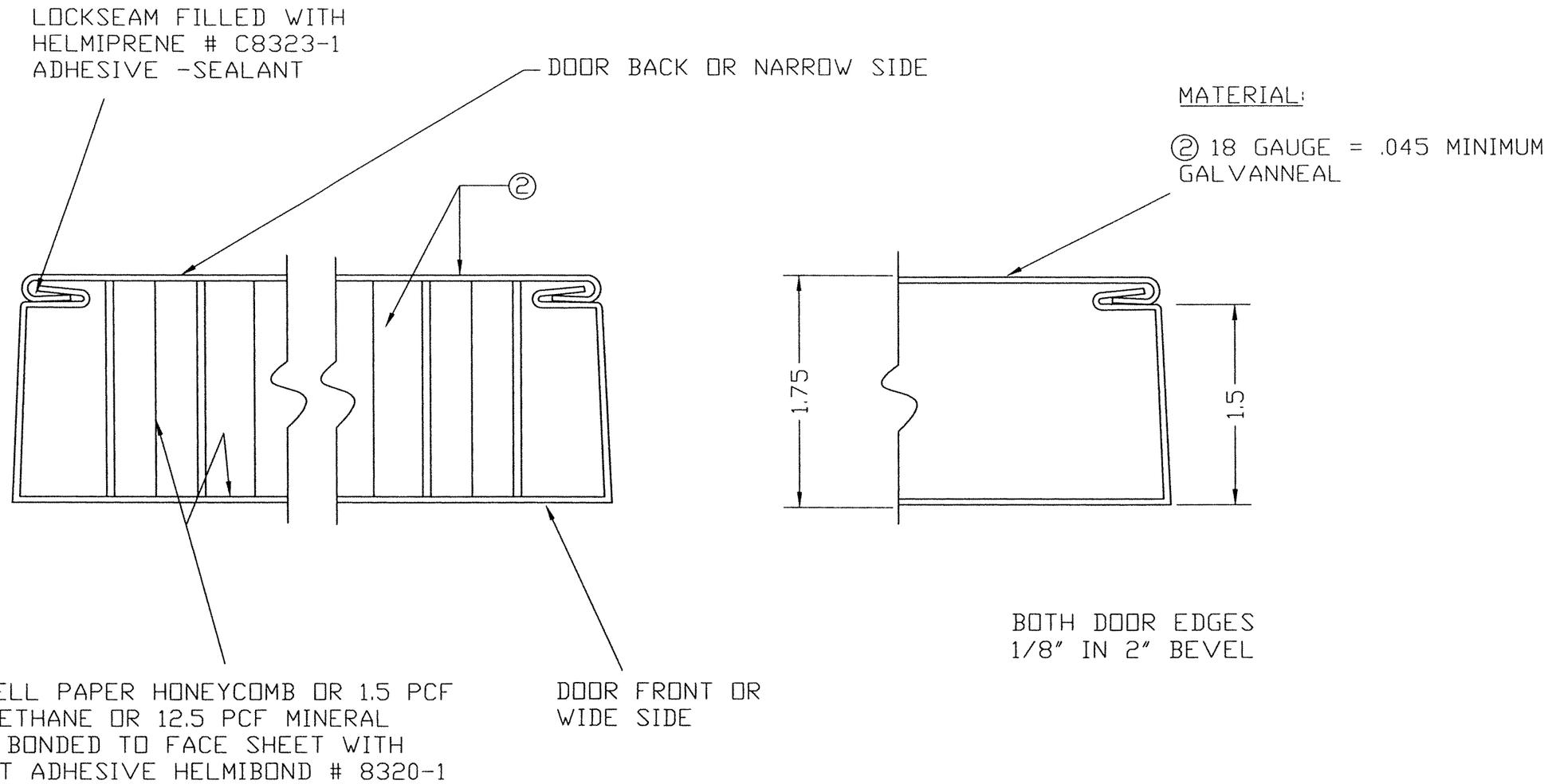

DOOR SECTION THROUGH EDGE SEAM, DETAIL #6

WALTER A. TILLIT JR. LICENSE No. 44167 STATE OF FLORIDA PROFESSIONAL ENGINEER

FLORIDA BUILDING CODE (HIGH VELOCITY HURRICANE ZONE)

©2023 TILTECO, INC.

TILTECO INC.
TILLIT TESTING & ENGINEERING COMPANY
6355N.W. 36th. St., Ste. 305, VIRGINIA GARDENS, FL. 33166
Phone : (305)871-1530 , Fax : (305)871-1531
e-mail: tilteco@aol.com
CA-0006719
WALTER A. TILLIT Jr. P.E.
FLORIDA Lic. # 44167

SERIES LS18 FLUSH OUTSWING COMMERCIAL STEEL DOOR W/SERIES "AS" STEEL FRAME

DAYBAR INDUSTRIES LTD
50 WEST DRIVE, BRAMPTON, ON CANADA, L6T 2J4
TEL: 905 625-8000
FAX: 905 625-4204

REV. No	DESCRIPTION	DATE	REV. No	DESCRIPTION	DATE
1	OLD 20-152	08/17/23	3		
2			4		

DRAWN BY: Y.M.

08/17/2023 DATE

23-178 DRAWING No

SHEET 4 OF 14

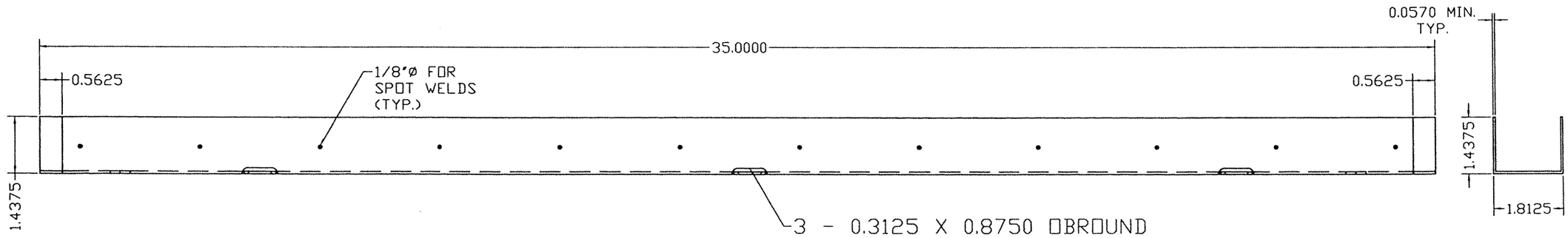

ELEVATION

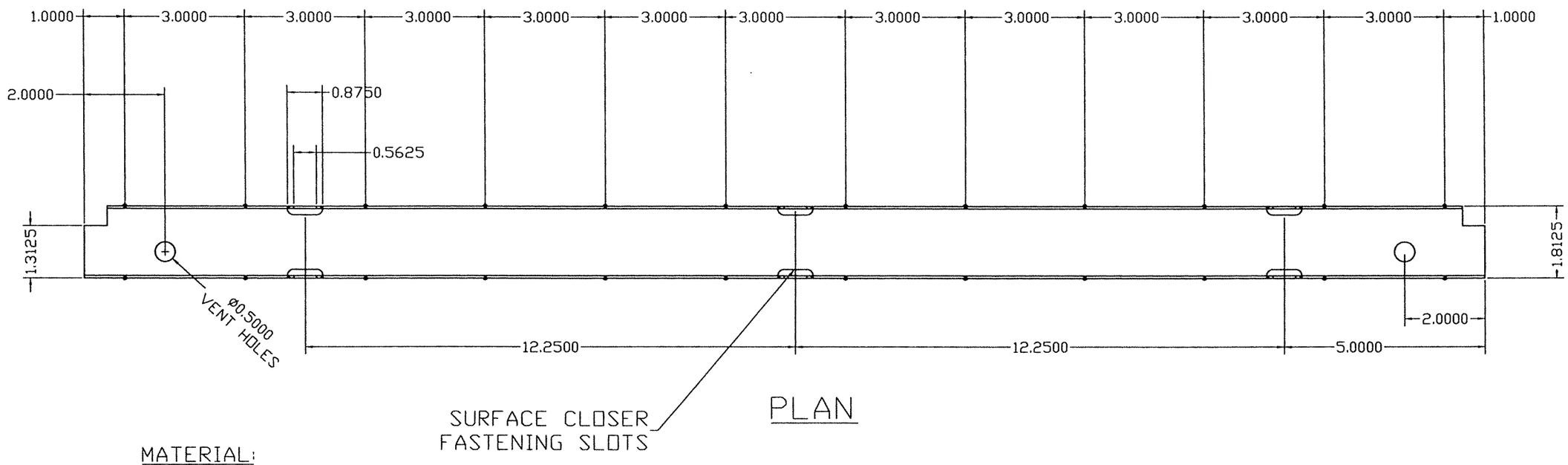

PLAN

MATERIAL:
16 GAUGE (0.057) MINIMUM
GALVANNEAL

DOOR TOP AND BOTTOM TYPICAL END CHANNEL

DETAIL #12

WALTER A. TILLIT JR
LICENSE
No. 44167
STATE OF
FLORIDA
PROFESSIONAL ENGINEER

7/2023

FLORIDA BUILDING CODE (HIGH VELOCITY HURRICANE ZONE)

©2023 TILTECO, INC.

TILTECO INC.
TILLIT TESTING & ENGINEERING COMPANY
6355N.W. 36th. St., Ste. 305, VIRGINIA GARDENS, FL 33166
Phone : (305)871-1530 . Fax : (305)871-1531
e-mail: tilteco@aol.com
CA-0006719
WALTER A. TILLIT Jr. P.E.
FLORIDA Lic. # 44167

SERIES LS18 FLUSH OUTSWING COMMERCIAL STEEL DOOR W/SERIES "AS" STEEL FRAME

DAYBAR INDUSTRIES LTD

50 WEST DRIVE, BRAMPTON,
ON CANADA, L6T 2J4
TEL: 905 625-8000
FAX: 905 625-4204

REV. No	DESCRIPTION	DATE	REV. No	DESCRIPTION	DATE
1	OLD 20-152	08/17/23	3		
2			4		

DRAWN BY: Y.M.

08/17/2023
DATE

23-178
DRAWING No

SHEET 5 OF 14

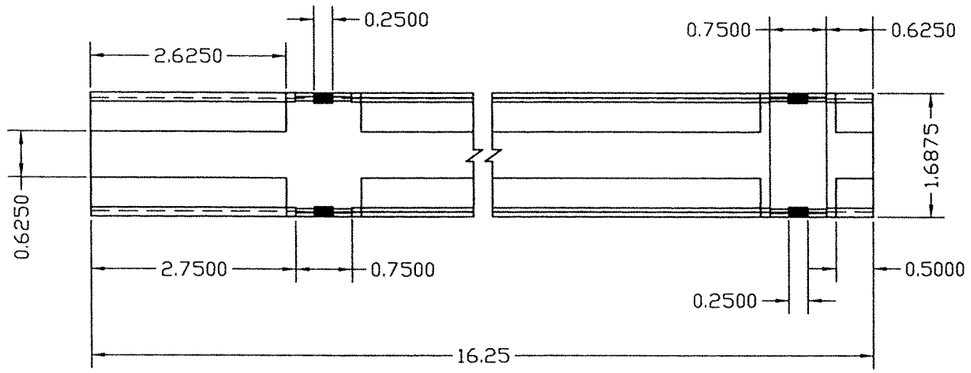

PLAN

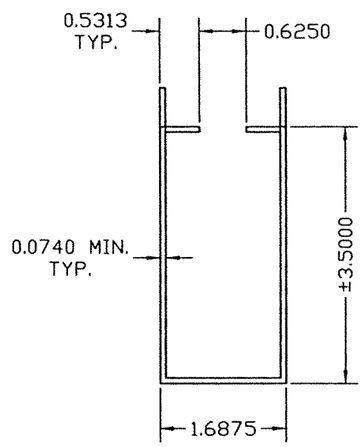

SECTION

MATERIAL:
14 GAUGE (0.074)
MINIMUM GALVANNEAL

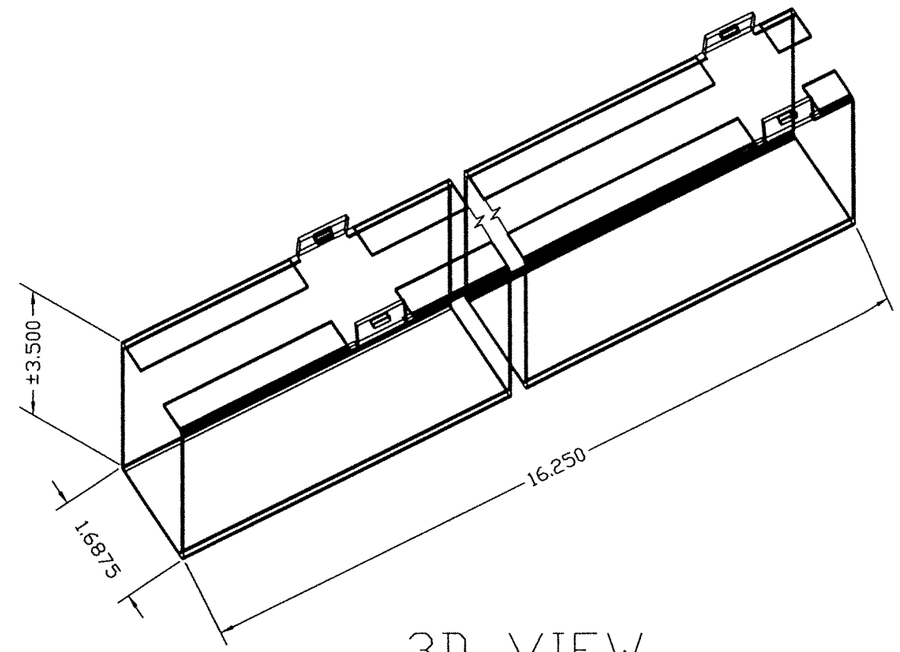

3D VIEW

DOOR SURFACE CLOSER REINFORCING DETAIL #11

WALTER A. TILLIT JR.
LICENSE
No. 44167
STATE OF
FLORIDA
PROFESSIONAL ENGINEER

8/17/2023

FLORIDA BUILDING CODE (HIGH VELOCITY HURRICANE ZONE)

©2023 TILTECO, INC.

TILTECO INC.
TILLIT TESTING & ENGINEERING COMPANY
6355N.W. 36th. St. Ste. 305, VIRGINIA GARDENS, Fl. 33166
Phone : (305)871-1530 . Fax : (305)871-1531
e-mail: tilteco@aol.com
CA-0006719
WALTER A. TILLIT Jr. P.E.
FLORIDA Lic. # 44167

SERIES LS18 FLUSH OUTSWING COMMERCIAL STEEL DOOR W/SERIES "AS" STEEL FRAME

DAYBAR INDUSTRIES LTD
50 WEST DRIVE, BRAMPTON,
ON CANADA, L6T 2J4
TEL: 905 625-8000
FAX: 905 625-4204

REV. No	DESCRIPTION	DATE	REV. No	DESCRIPTION	DATE
1	OLD 20-152	08/17/23	3		
2			4		

DRAWN BY: Y.M.

08/17/2023
DATE

23-178
DRAWING No

SHEET 6 OF 14

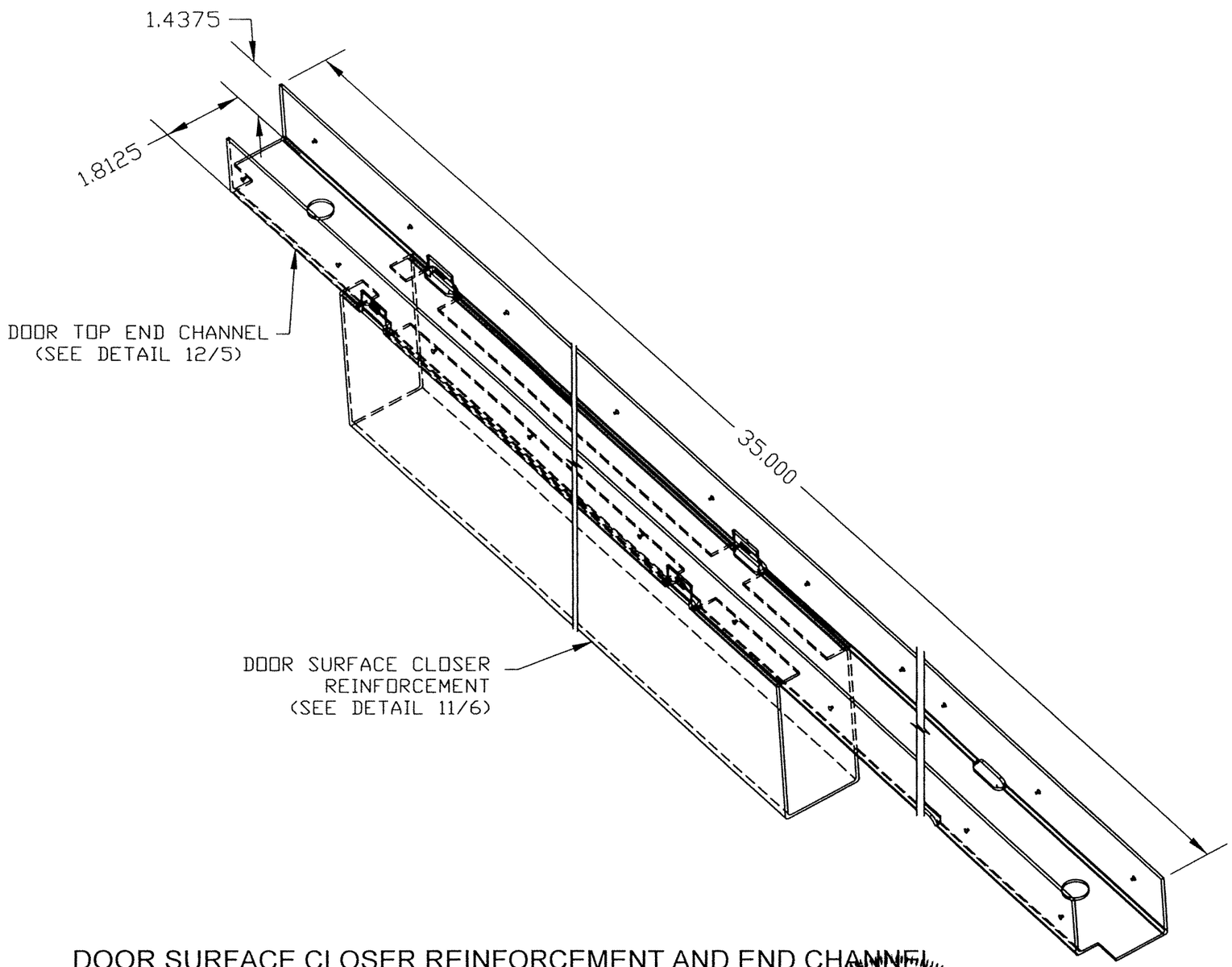

DOOR SURFACE CLOSER REINFORCEMENT AND END CHANNEL ASSEMBLY DETAIL #13

WALTER A. TILLIT JR.
LICENSE
No. 44167
STATE OF FLORIDA
PROFESSIONAL ENGINEER

FLORIDA BUILDING CODE (HIGH VELOCITY HURRICANE ZONE)

©2023 TILTECO, INC.

TILTECO INC.
TILLIT TESTING & ENGINEERING COMPANY
6355N.W. 36th. St. Ste. 305, VIRGINIA GARDENS, Fl. 33166
Phone : (305)871-1530 . Fax : (305)871-1531
e-mail: tilteco@aol.com
CA-0006719
WALTER A. TILLIT Jr. P.E.
FLORIDA Lic. # 44167

SERIES LS18 FLUSH OUTSWING COMMERCIAL STEEL DOOR W/SERIES "AS" STEEL FRAME

DAYBAR INDUSTRIES LTD
50 WEST DRIVE, BRAMPTON,
ON CANADA, L6T 2J4
TEL: 905 625-8000
FAX: 905 625-4204

REV. No	DESCRIPTION	DATE	REV. No	DESCRIPTION	DATE
1	OLD 20-152	08/17/23	3		
2			4		

DRAWN BY: Y.M.

08/17/2023
DATE

23-178
DRAWING No

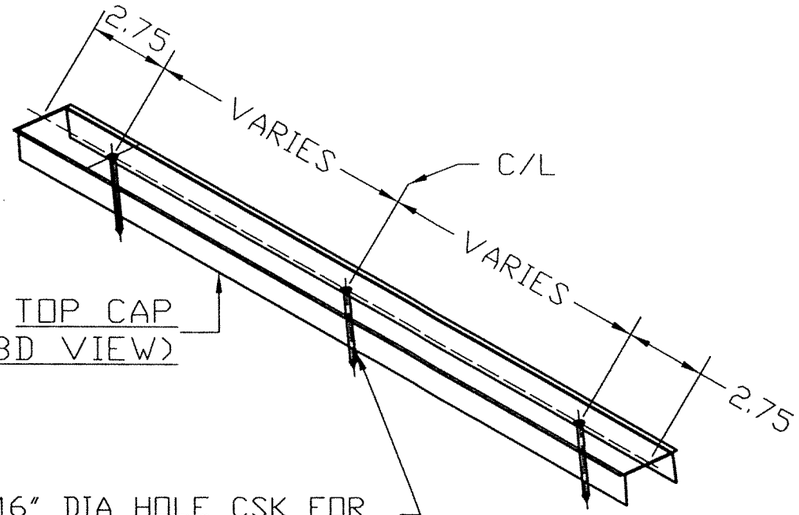

TOP CAP
(3D VIEW)

NOTE:
MATERIAL 20 GAUGE
(0.035) MINIMUM
GALVANNEAL

INSTALLATION:
APPLY BEAD OF GE SILICONE II SEALANT
TO INSIDE-TOP EDGE OF DOOR.
PRESS FIT TOP CAP INTO DOOR
TOP CHANNEL & SCREW FASTEN

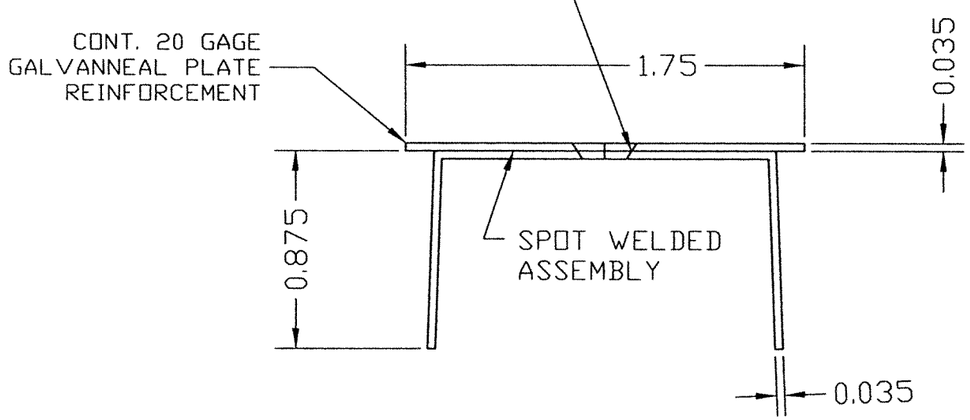

TOP CAP (SECTION)

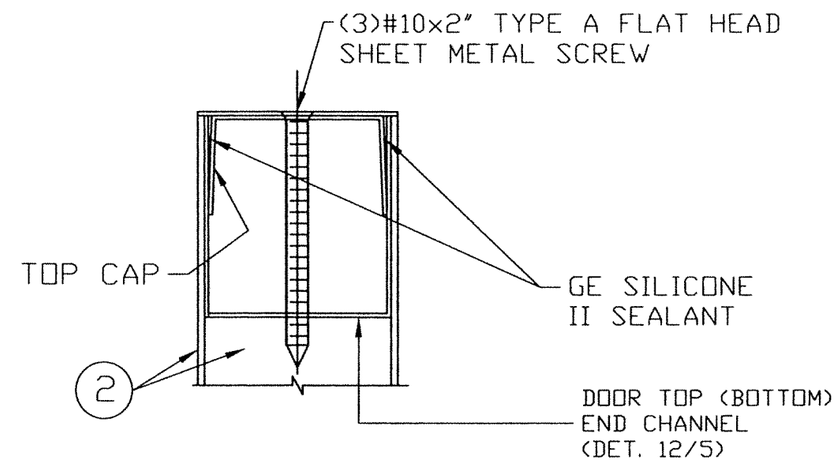

DOOR ASSEMBLY
AT TOP EDGE

PAGE #8 DOOR STEEL TOP CAP
DETAIL #14

WALTER A. TILLIT JR
LICENSE
No. 44167
STATE OF
FLORIDA
PROFESSIONAL ENGINEER
7/2023

FLORIDA BUILDING CODE (HIGH VELOCITY HURRICANE ZONE)

©2023 TILTECO, INC.

TILTECO INC.
TILLIT TESTING & ENGINEERING COMPANY
6355N.W. 36th. St., Ste. 305, VIRGINIA GARDENS, Fl. 33166
Phone : (305)871-1530 . Fax : (305)871-1531
e-mail: tilteco@aol.com
CA-0006719
WALTER A. TILLIT Jr. P.E.
FLORIDA Lic. # 44167

SERIES LS18 FLUSH OUTSWING COMMERCIAL STEEL DOOR W/SERIES "AS" STEEL FRAME

DAYBAR INDUSTRIES LTD
50 WEST DRIVE, BRAMPTON,
ON CANADA, L6T 2J4
TEL: 905 625-8000
FAX: 905 625-4204

REV. No	DESCRIPTION	DATE	REV. No	DESCRIPTION	DATE
1	OLD 20-152	08/17/23	3		
2			4		

DRAWN BY: Y.M.
08/17/2023 DATE
23-178 DRAWING No
SHEET 8 OF 14

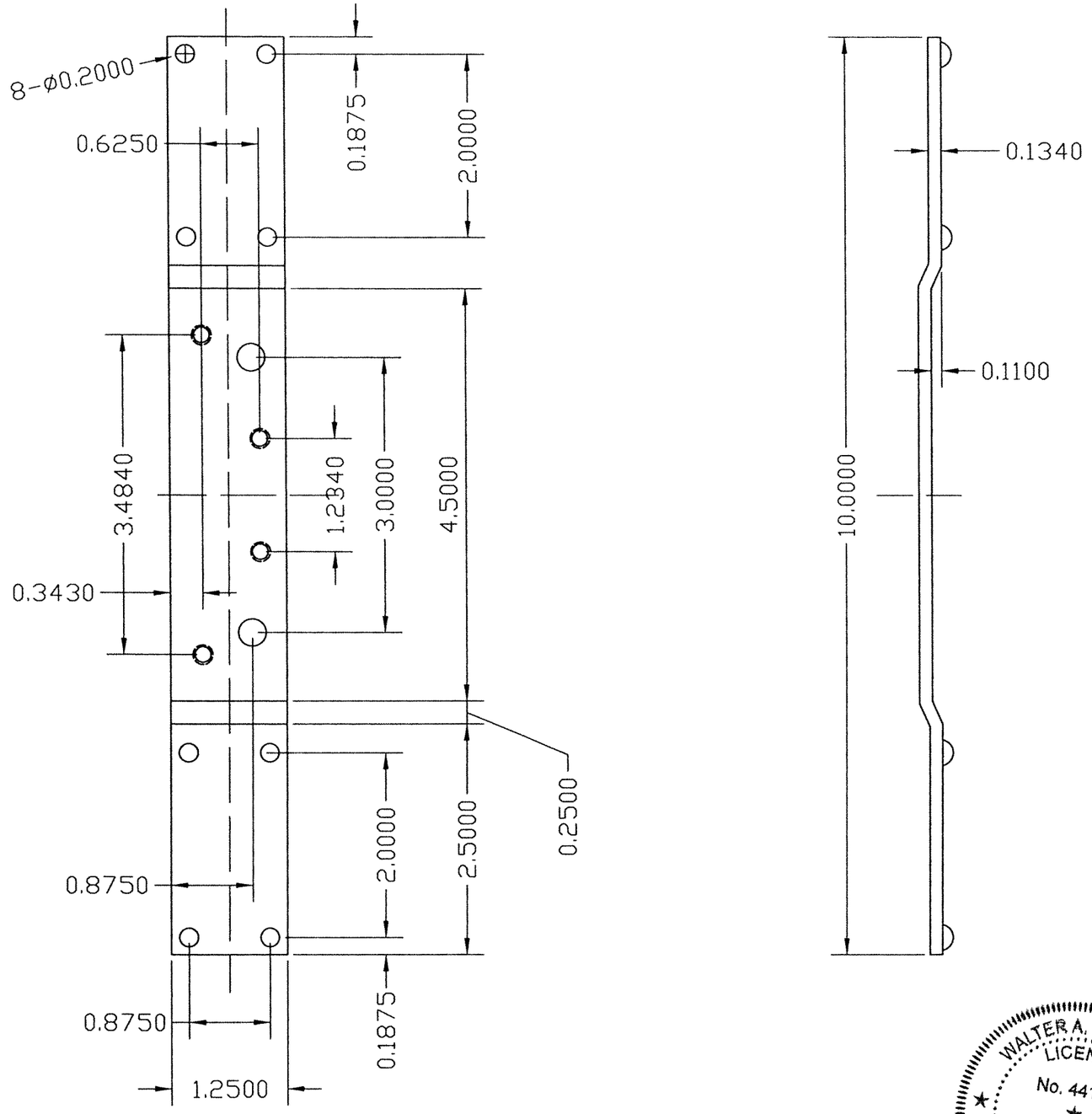

MATERIAL:
GAUGE 10 MINIMUM
GALVANNEAL

DOOR HINGE REINFORCING.

WALTER A. TILLIT JR.
LICENSE
No. 44167
STATE OF FLORIDA
PROFESSIONAL ENGINEER

8/17/23

FLORIDA BUILDING CODE (HIGH VELOCITY HURRICANE ZONE)

©2023 TILTECO, INC.

TILTECO INC.
TILLIT TESTING & ENGINEERING COMPANY
6355N.W. 36th. St. Ste. 305, VIRGINIA GARDENS, Fl. 33166
Phone : (305)871-1530 . Fax : (305)871-1531
e-mail: tilteco@aol.com
CA-0006719
WALTER A. TILLIT Jr. P.E.
FLORIDA Lic. # 44167

SERIES LS18 FLUSH OUTSWING COMMERCIAL STEEL DOOR W/SERIES "AS" STEEL FRAME

DRAWN BY: Y.M.

DAYBAR INDUSTRIES LTD
50 WEST DRIVE, BRAMPTON,
ON CANADA, L6T 2J4
TEL: 905 625-8000
FAX: 905 625-4204

08/17/2023
DATE

23-178
DRAWING No

REV. No	DESCRIPTION	DATE	REV. No	DESCRIPTION	DATE
1	OLD 20-152	08/17/23	3		
2			4		

SHEET 9 OF 14

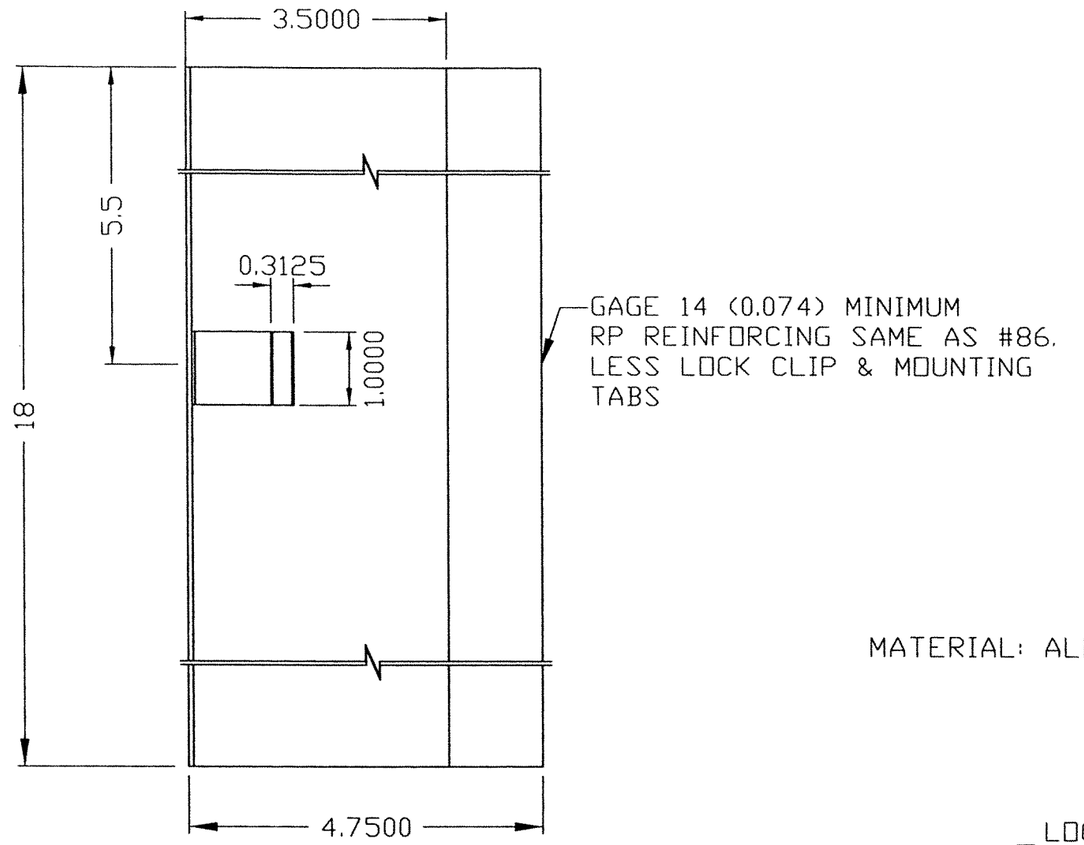

ELEVATION

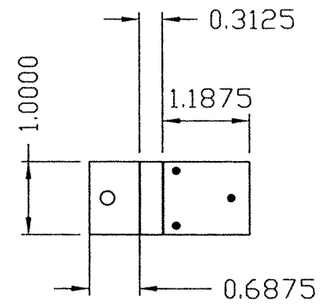

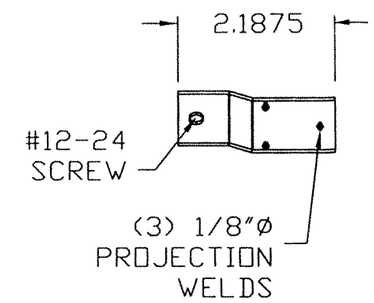

DOOR EDGE MOUNTING TAB
14 GA (0.074) MIN

MATERIAL: ALL GALVANNEAL

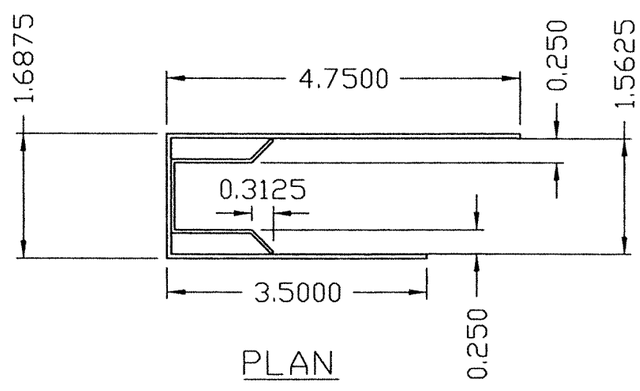

PLAN

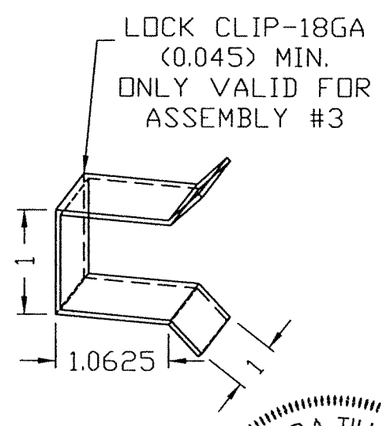

ANSI #A115.1 #86 MORTISE LOCK,RP REINFORCINGS
DETAIL #9

WALTER A. TILLIT JR.
LICENSE
No. 44167
STATE OF
FLORIDA
PROFESSIONAL ENGINEER

FLORIDA BUILDING CODE (HIGH VELOCITY HURRICANE ZONE)

©2023 TILTECO, INC.

TILTECO INC.
TILLIT TESTING & ENGINEERING COMPANY
6355N.W. 36th. St., Ste. 305, VIRGINIA GARDENS, FL 33166
Phone : (305)871-1530 . Fax : (305)871-1531
e-mail: tilteco@aol.com
CA-0006719
WALTER A. TILLIT Jr. P.E.
FLORIDA Lic. # 44167

SERIES LS18 FLUSH OUTSWING COMMERCIAL
STEEL DOOR W/SERIES "AS" STEEL FRAME

DAYBAR INDUSTRIES LTD
50 WEST DRIVE, BRAMPTON,
ON CANADA, L6T 2J4
TEL: 905 625-8000
FAX: 905 625-4204

REV. No	DESCRIPTION	DATE	REV. No	DESCRIPTION	DATE
1	OLD 20-152	08/17/23	3		
2			4		

DRAWN BY: Y.M.

08/17/2023
DATE

23-178
DRAWING No

SHEET 10 OF 14

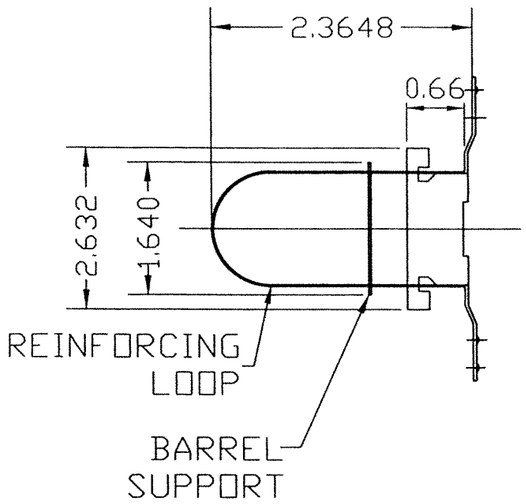

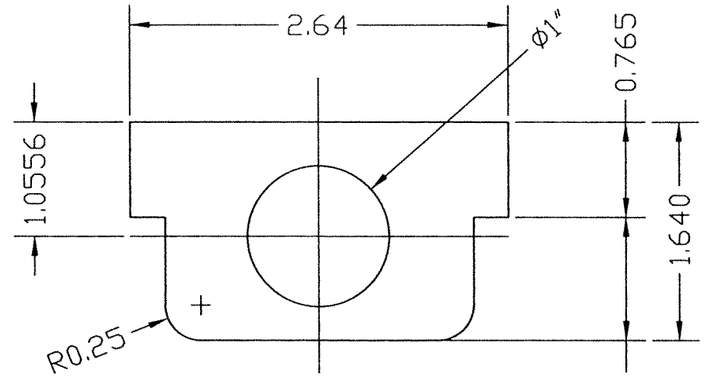

BARREL SUPPORT

MAT: 0.035 SATINCOAT

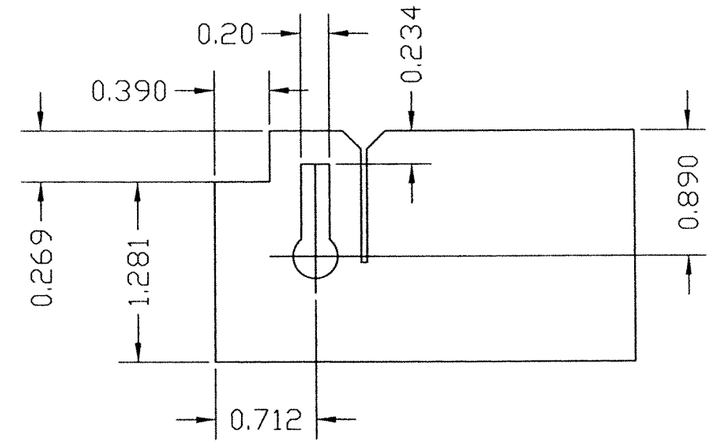

REINFORCING LOOP

MAT: .035 SATINCOAT

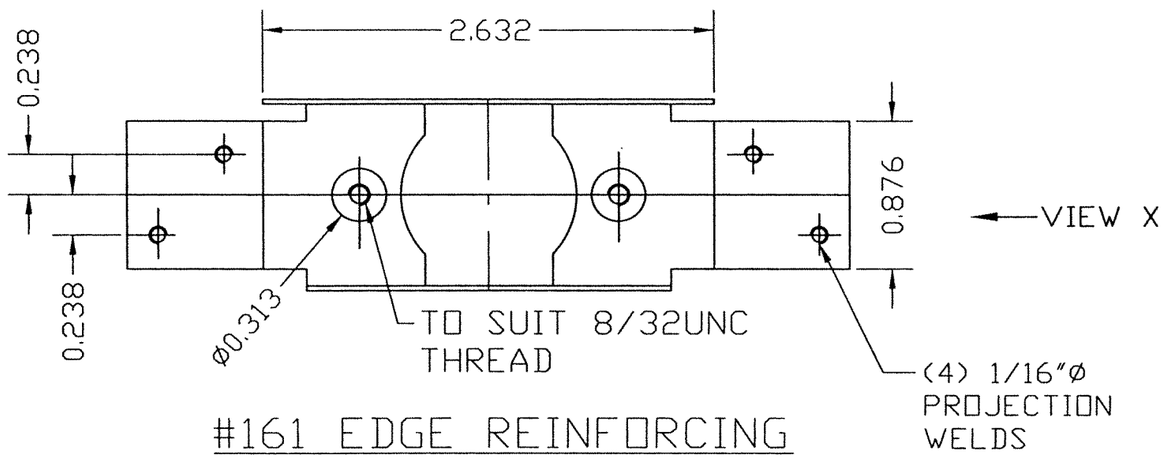

#161 EDGE REINFORCING

MAT: 0.078 SATINCOAT

VIEW X

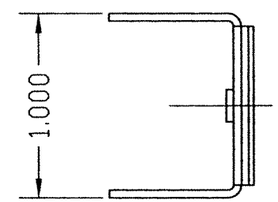

VIEW X

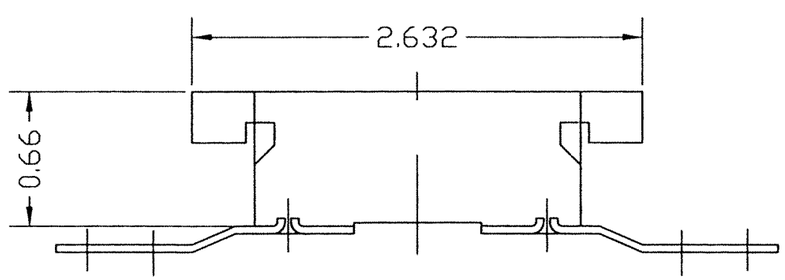

SECTION THROUGH EDGE REINFORCING

#161 LOCK, REINFORCINGS DETAIL #8

WALTER A. TILLIT JR. LICENSE No. 44167 STATE OF FLORIDA PROFESSIONAL ENGINEER

8/17/2023

FLORIDA BUILDING CODE (HIGH VELOCITY HURRICANE ZONE)

©2023 TILTECO, INC.

TILTECO INC.
TILLIT TESTING & ENGINEERING COMPANY
6355N.W. 36th. St., Ste. 305, VIRGINIA GARDENS, FL 33166
Phone : (305)871-1530 . Fax : (305)871-1531
e-mail: tilteco@aol.com
CA-0006719
WALTER A. TILLIT Jr. P.E.
FLORIDA Lic. # 44167

SERIES LS18 FLUSH OUTSWING COMMERCIAL STEEL DOOR W/SERIES "AS" STEEL FRAME

DAYBAR INDUSTRIES LTD
50 WEST DRIVE, BRAMPTON, ON CANADA, L6T 2J4
TEL: 905 625-8000
FAX: 905 625-4204

REV. No	DESCRIPTION	DATE	REV. No	DESCRIPTION	DATE
1	OLD 20-152	08/17/23	3		
2			4		

DRAWN BY: Y.M.

08/17/2023 DATE

23-178 DRAWING No

SHEET 11 OF 14

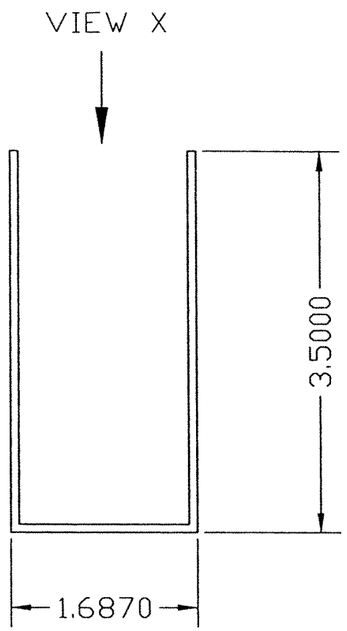

PLAN

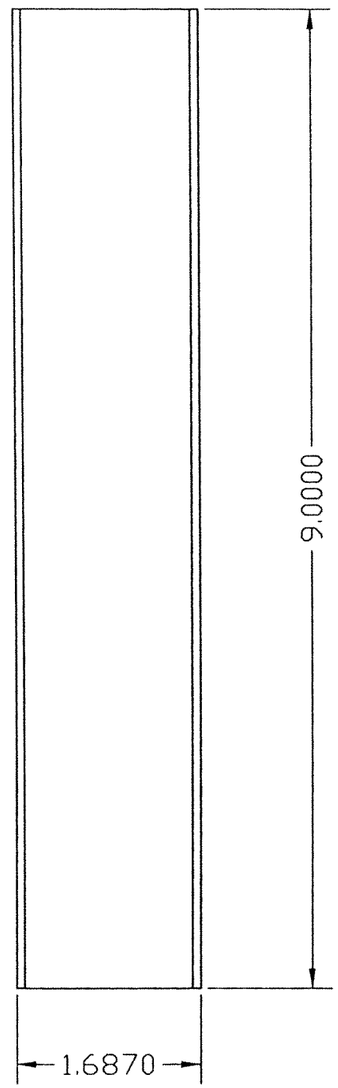

VIEW X

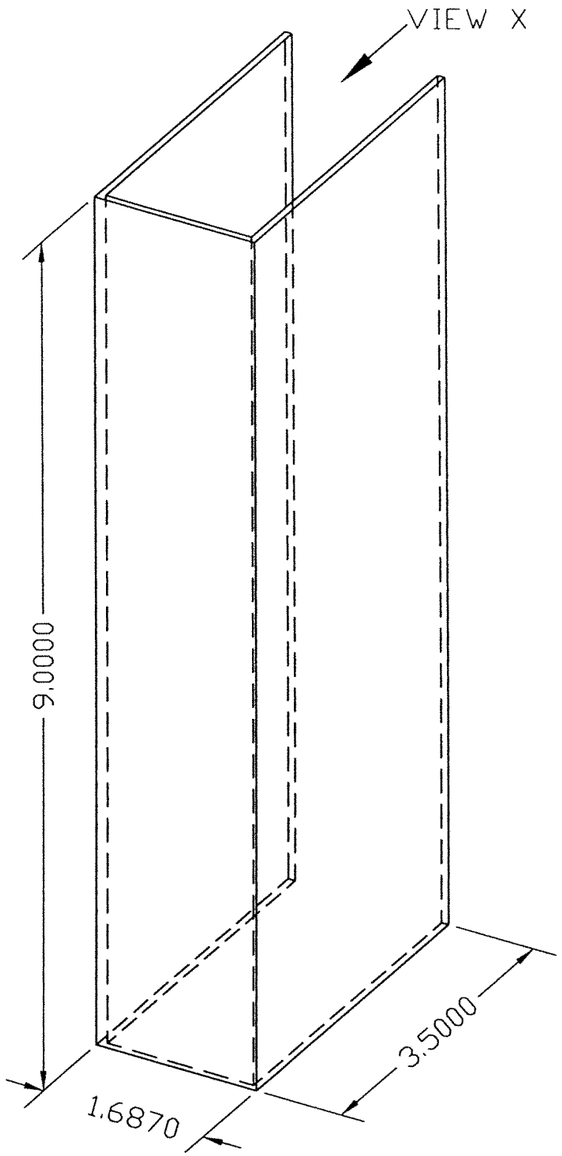

3D VIEW

MATERIAL:
14 GAUGE (0.074) MINIMUM
GALVANNEAL, GLUED TO
DOOR AT HEAD & SILL
USING HEMILBOND 8320-1
CONTACT ADHESIVE.

PAGE #12 RIM PANIC SURFACE BOLT REINFORCINGS
DETAIL #10

WALTER A. TILLIT JR.
LICENSE
No. 44167
STATE OF
FLORIDA
PROFESSIONAL ENGINEER

8/17/2023

FLORIDA BUILDING CODE (HIGH VELOCITY HURRICANE ZONE)

©2023 TILTECO, INC.

TILTECO INC.
TILLIT TESTING & ENGINEERING COMPANY
6355N.W. 36th. St., Ste. 305, VIRGINIA GARDENS, FL 33166
Phone : (305)871-1530 . Fax : (305)871-1531
e-mail: tilteco@aol.com
CA-0006719
WALTER A. TILLIT Jr. P.E.
FLORIDA Lic. # 44167

SERIES LS18 FLUSH OUTSWING COMMERCIAL STEEL DOOR W/SERIES "AS" STEEL FRAME

DAYBAR INDUSTRIES LTD

50 WEST DRIVE, BRAMPTON,
ON CANADA, L6T 2J4
TEL: 905 625-8000
FAX: 905 625-4204

REV. No	DESCRIPTION	DATE	REV. No	DESCRIPTION	DATE
1	OLD 20-152	08/17/23	3		
2			4		

DRAWN BY: Y.M.

08/17/2023
DATE

23-178
DRAWING No

SHEET 12 OF 14

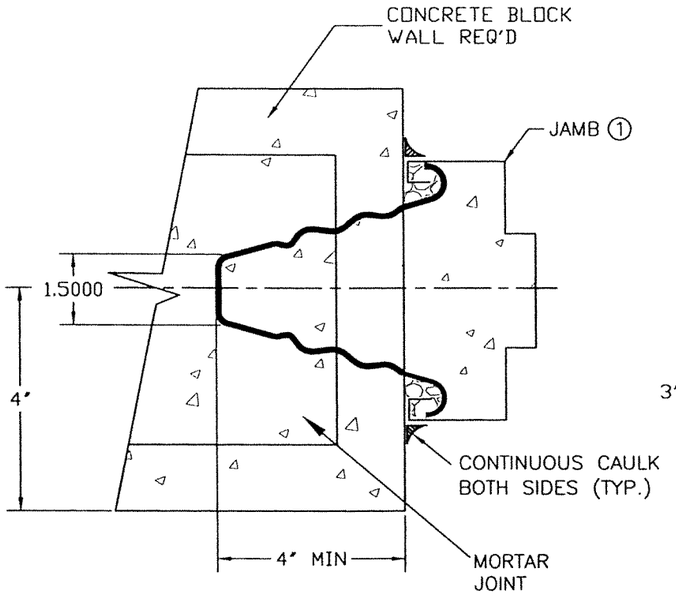

⑥ MASONRY WIRE ANCHORS (0.157" DIA, 9 1/2" LONG) IN HORIZ. MORTAR JOINTS; FILL JAMBS ① SOLID WITH MORTAR "DAYBAR # PT1-001"

WIRE ANCHOR DETAIL #21

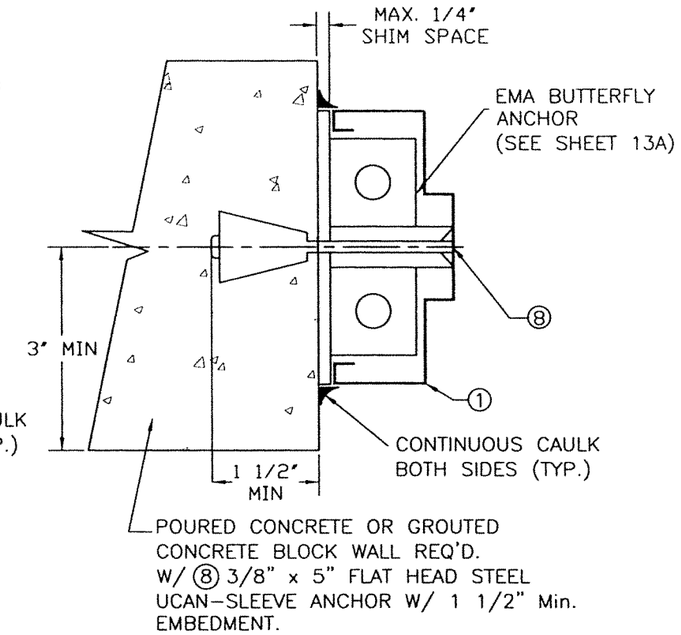

(E.M.A.) EXISTING MASONRY ANCHOR DETAIL #22

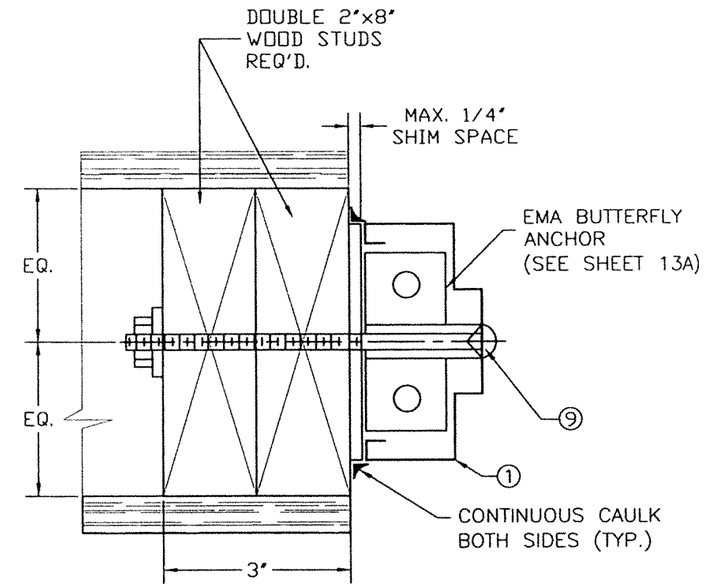

WOOD BUCK
(MIN. 2"x 8" NOMINAL)
(8) 3/8"-16 X 6" STEEL CARRIAGE BOLT C/W NUT AND WASHER

(E.M.A.) EXISTING WOOD BUCK ANCHOR OPTION FOR DETAIL #22

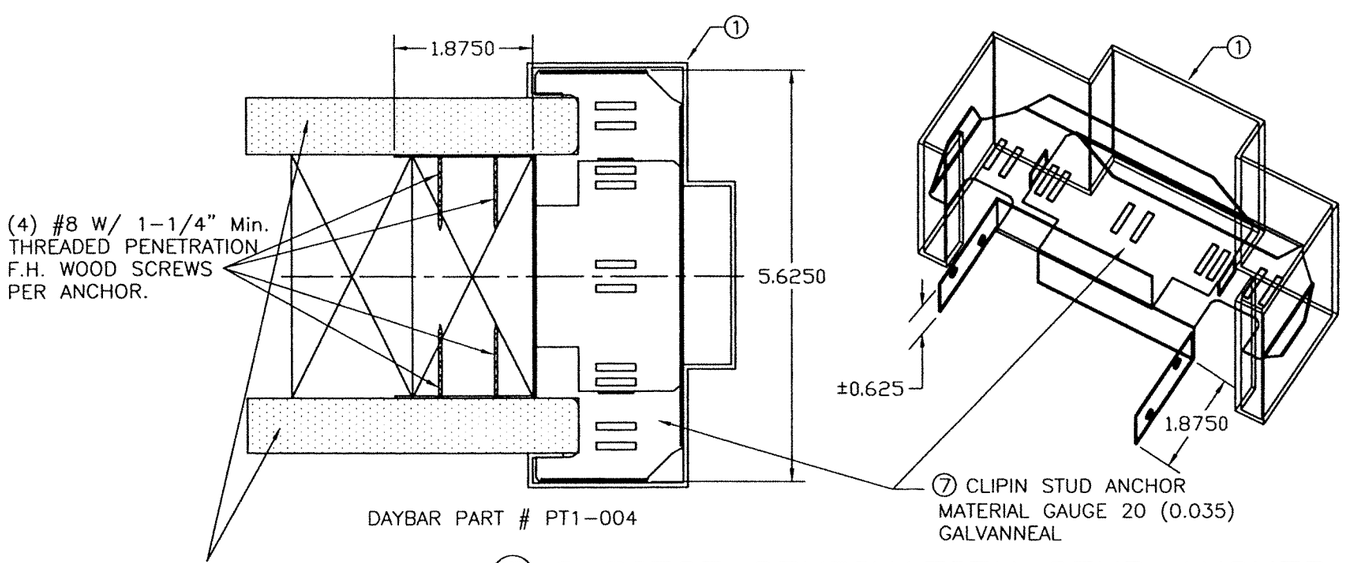

⑦ 2 PIECE COMBINATION STUD ANCHOR DETAIL #20

NOTES:

3 ANCHORS REQUIRED PER JAMB, 6 PER FRAME FOR DETAILS #20 & 21.
4 ANCHORS REQUIRED PER JAMB, 8 PER FRAME FOR DETAIL #22.

WALTER A. TILLIT JR. LICENSE No. 44167 STATE OF FLORIDA PROFESSIONAL ENGINEER

8/17/2023

FLORIDA BUILDING CODE (HIGH VELOCITY HURRICANE ZONE)

©2023 TILTECO, INC.

TILTECO INC.
TILLIT TESTING & ENGINEERING COMPANY
6355N.W. 36th. St., Ste. 305, VIRGINIA GARDENS, Fl. 33166
Phone : (305)871-1530 Fax : (305)871-1531
e-mail: tilteco@aol.com
CA-0006719
WALTER A. TILLIT Jr. P.E.
FLORIDA Lic. # 44167

SERIES LS18 FLUSH OUTSWING COMMERCIAL STEEL DOOR W/SERIES "AS" STEEL FRAME

DAYBAR INDUSTRIES LTD
50 WEST DRIVE, BRAMPTON, ON CANADA, L6T 2J4
TEL: 905 625-8000
FAX: 905 625-4204

REV. No	DESCRIPTION	DATE	REV. No	DESCRIPTION	DATE
1	OLD 20-152	08/17/23	3		
2			4		

DRAWN BY: Y.M.
08/17/2023 DATE
23-178 DRAWING No
SHEET 13 OF 14

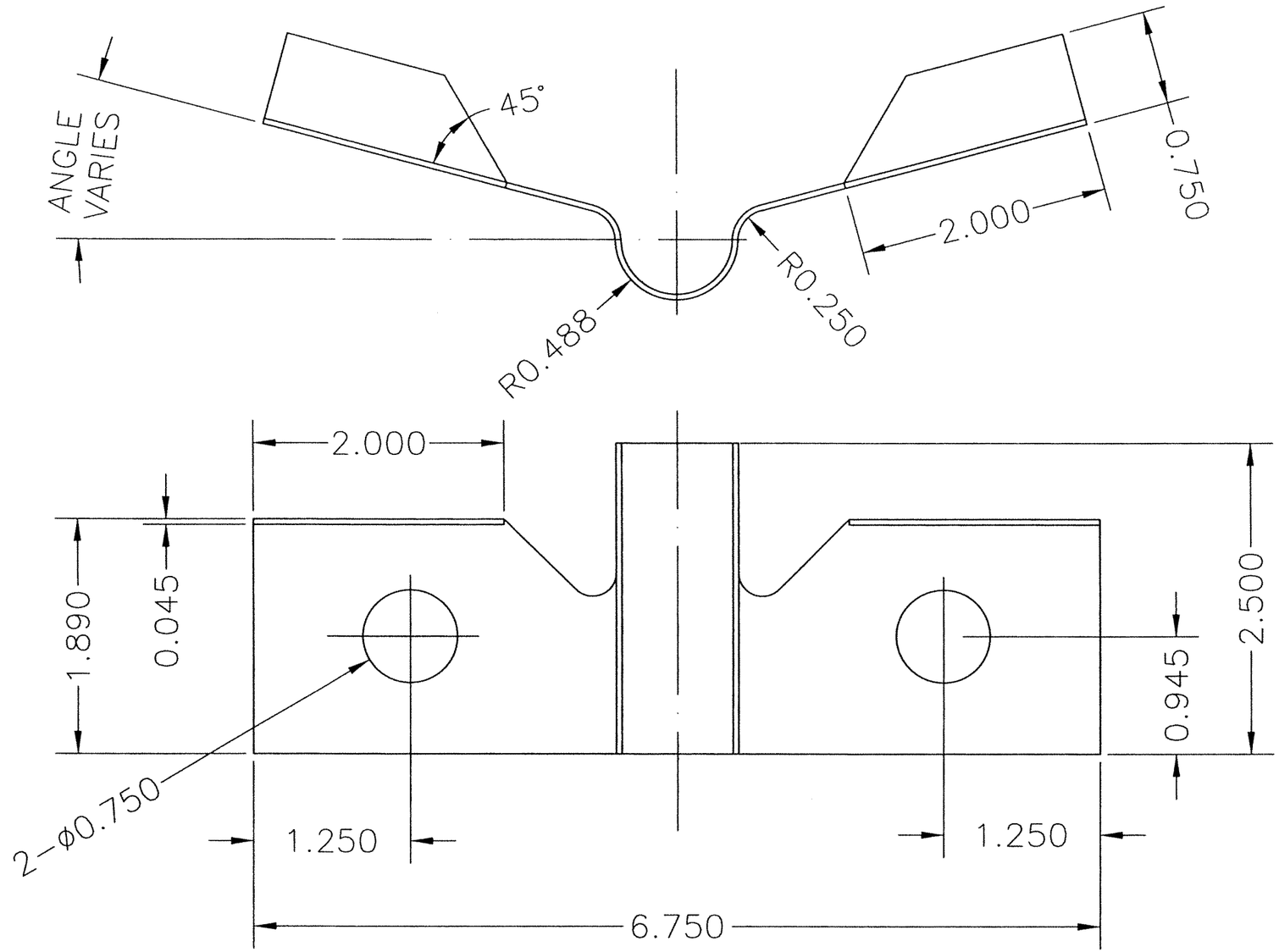

MATERIAL:
18 GA SATIN COAT

EMA BUTTERFLY ANCHOR

WALTER A. TILLIT JR. LICENSE No. 44167 STATE OF FLORIDA PROFESSIONAL ENGINEER

8/17/23

FLORIDA BUILDING CODE (HIGH VELOCITY HURRICANE ZONE)

©2023 TILTECO, INC.

TILTECO INC.
TILLIT TESTING & ENGINEERING COMPANY
6355N.W. 36th. St., Ste. 305, VIRGINIA GARDENS, Fl. 33166
Phone : (305)871-1530 . Fax : (305)871-1531
e-mail: tilteco@aol.com
CA-0006719
WALTER A. TILLIT Jr. P.E.
FLORIDA Lic. # 44167

SERIES LS18 FLUSH OUTSWING COMMERCIAL STEEL DOOR W/SERIES "AS" STEEL FRAME

DAYBAR INDUSTRIES LTD
50 WEST DRIVE, BRAMPTON, ON CANADA, L6T 2J4
TEL: 905 625-8000
FAX: 905 625-4204

REV. No	DESCRIPTION	DATE	REV. No	DESCRIPTION	DATE
1	OLD 20-152	08/17/23	3		
2			4		

DRAWN BY: Y.M.

08/17/2023
DATE

23-178
DRAWING No

SHEET 13A OF 14

BILL OF MATERIALS:

ITEM	QUANTITY	MATERIAL	BASIC DIMENSIONS OR ADDITIONAL DETAILS
1	1	16 GAUGE WELDED FRAME	AS 5 3/4" JAMB DEPTH X 2" FACE X .057 MIN
2	1	18 GAUGE FLUSH DOOR COMMERCIAL STEEL	1 3/4" THICK X (.045 MIN). C/W PAPER HONEYCOMB OR 1.5 PCF POLYURETHANE OR 21.5 PCF MINERAL BOARD CORE
3	3	HINGE REINFORCINGS (DOOR)	1 1/4" X 10" X 10 GAUGE (.135 MIN)
4	3	HINGE REINFORCINGS (FRAME)	1 1/2" X 8 3/4" X 10 GAUGE (.135 MIN)
5	1	STRIKE REINFORCINGS (FRAME)	1 3/8" X 7 5/16" X 14 GAUGE (.072 MIN)
6	6	WIRE MASONRY FRAME ANCHORS (3 PER JAMB) (OR)	9 1/2" LONG X 10 GAUGE (.135 MIN)
7	6	CLIPIN STUD ANCHORS (3 PER JAMB) (OR)	1 7/8" X 5 5/8" X 20 GAUGE (.035 MIN)
8	6	EMA ANCHOR BOLTS (4 PER JAMB) (OR)	3/8" X 5" STEEL UNICAN-SLEEVE ANCHOR
9	6	CARRIAGE ANCHOR BOLTS (4 PER JAMB) (OR)	3/8"-16 X 6" STEEL CARRIAGE BOLT C/W NUT AND WASHER
10	3	HINGES-HAGER BB1191	4.5" X 4.5" STANDARD WEIGHT (.134 THICK)
11	1	RIM EXIT: DETEX VALUE SERIES C/W OPTIONAL ALARM	N/A
12	1	MORTISE LOCK: MARKS SERIES 5	N/A
13	1	CYLINDRICAL LOCK: MARKS SERIES 170 GRADE #1	N/A
14	1	DEAD BOLT: MARKS SERIES 130	N/A
15	1	WEATHER STRIP: NATIONAL GUARD PRODUCTS #120NA	SECURED WITH #6 X 1/2" SMS SCREWS
16	1	THRESHOLD: NATIONAL GUARD PRODUCTS #950NA	EXTRUDED ALUMINUM
17	1	CAULKING: GE SILICONE II	N/A

WALTER A. TILLIT JR.
LICENSE
No. 44167
STATE OF FLORIDA
PROFESSIONAL ENGINEER

8/17/2023

FLORIDA BUILDING CODE (HIGH VELOCITY HURRICANE ZONE)

©2023 TILTECO, INC.

TILTECO INC.
TILLIT TESTING & ENGINEERING COMPANY
6355N.W. 36th. St., Ste. 305, VIRGINIA GARDENS, Fl. 33166
Phone : (305)871-1530 , Fax : (305)871-1531
e-mail: tilteco@aol.com
CA-0006719
WALTER A. TILLIT Jr. P.E.
FLORIDA Lic. # 44167

SERIES LS18 FLUSH OUTSWING COMMERCIAL STEEL DOOR W/SERIES "AS" STEEL FRAME

DAYBAR INDUSTRIES LTD
50 WEST DRIVE, BRAMPTON,
ON CANADA, L6T 2J4
TEL: 905 625-8000
FAX: 905 625-4204

REV. No	DESCRIPTION	DATE	REV. No	DESCRIPTION	DATE
1	OLD 20-152	08/17/23	3		
2			4		

DRAWN BY: Y.M.

08/17/2023
DATE

23-178
DRAWING No

SHEET 14 OF 14